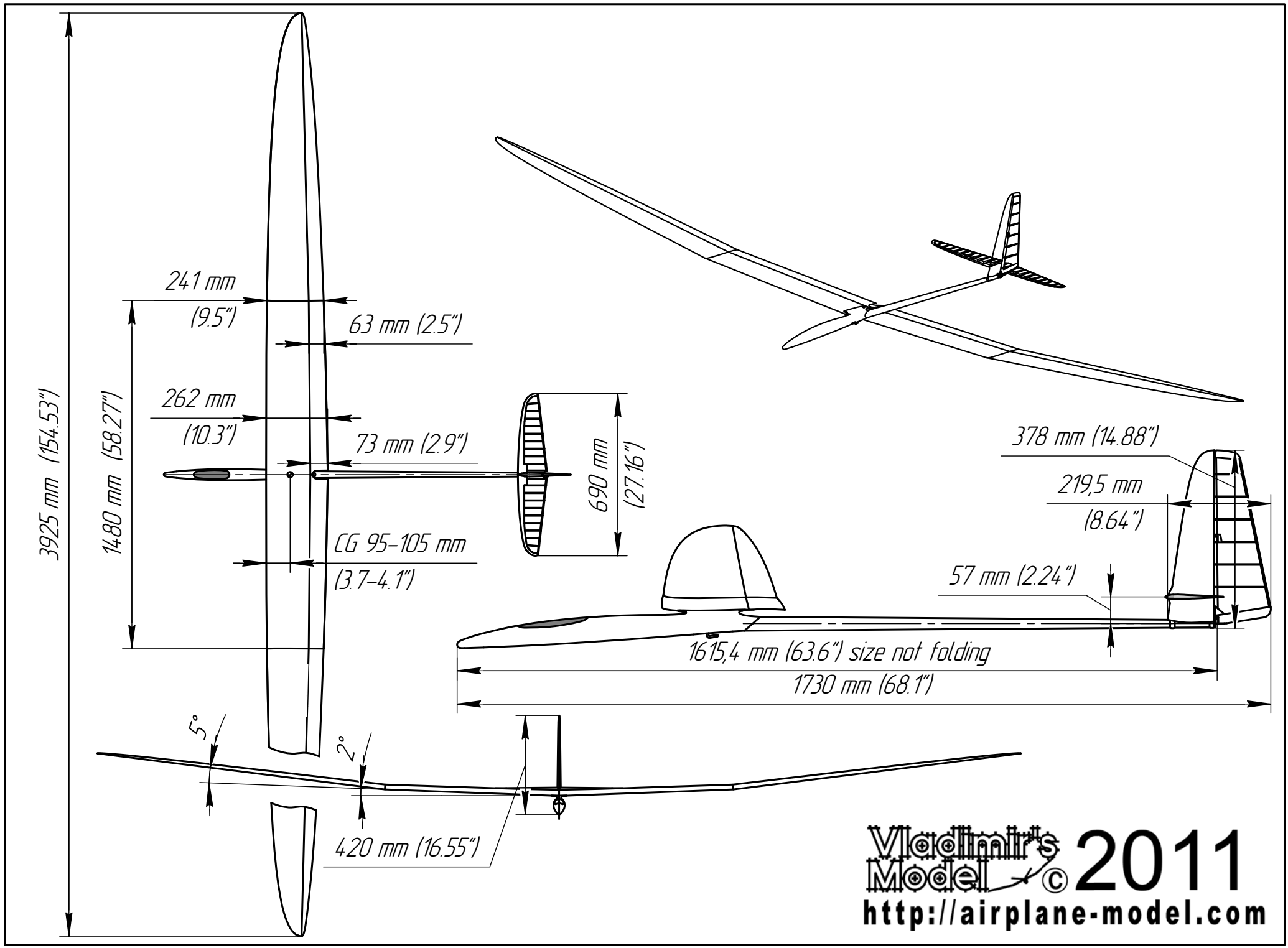
3925 mm (154.53")
1480 mm (58.27")
241 mm
(9.5")
63 mm (2.5")
262 mm
(10.3")
73 mm (2.9")
690 mm
(27.16")
CG 95–105 mm
(3.7–4.1")
378 mm (14.88")
219,5 mm
(8.64")
57 mm (2.24")
1615,4 mm (63.6") size not folding
1730 mm (68.1")
5°
2°
420 mm (16.55")
Vladimir's Model © 2011
http://airplane-model.com